Glass Door Display

GDM-41-HC-LD

Upright Retail Merchandiser Refrigerator, 2 Full Glass Slide Doors

Dimensions	
External Width (mm)	1197
External Depth (mm)	753
External Height (mm)	1998
Exclusions	Depth does not include 10 mm for door handle or 13 mm for rear access panel.
Net Volume (Litres)	722
Gross Volume (Litres)	1160
Display Area (m^2)	1.2
Supplied Shelves	8
Shelf Size (L x D mm)	531 x 523
Internal Net Height (mm)	1300
Unpackaged Weight (kg)	187
Packaged Weight (kg)	198
Packaged Dimensions (W x D x H mm)	1270 x 839 x 2134
Supplied with	Product supplied with Levelling Screws. Optional castors sold seperately.

Build	
Door Description	2 Full Glass Slide Doors
Exterior Construction	Stainless Steel/Aluminium front, Aluminium sides and rear (Black or White Powder Coat option)
Interior Construction	White coated aluminium, stainless steel base
Air Intake Position	Front
Ventilation Position	Rear
Clearance Required	26 mm rear, zero sides
Cord Length (Meters)	2.74
Internal Lighting	LED
Standard w/ Locks	Not Standard. Options available.

Technical	
Temperature Holding	0.5 : 3.3°C
Refrigerant	R290
Voltage / Frequency / Phase	220-240V/50-60Hz/1
Amps	2.2
Wattage	506
Temperature Class	M1
Operating Statement	Tested at 25°C, 60% RH, per 'Refrigerators with a Direct Sales Function' for perishable food merchandising.
Testing Standard	EN 23953
EEC	B
EEI	17.4
kWh/24hr	4.39
kWh/Annum	1601
Defrost Type	Auto

WARRANTY 5 YEARS PARTS, COMPRESSOR AND LABOUR

natural refrigerant.

Specifications subject to change without notice.
Chart dimensions rounded up to the next whole millimeter (inches rounded up to the 1/8")

UK & Ireland 0800 783 2049 TFIUK@truemfg.com
EMEA +41 61 563 07 05 TrueCHCustomerService@truemfg.com
Australia +61 2 9619 9999 TrueRefAus@truemfg.com

Glass Door Display

GDM-41-HC-LD

Upright Retail Merchandiser Refrigerator, 2 Full Glass Slide Doors

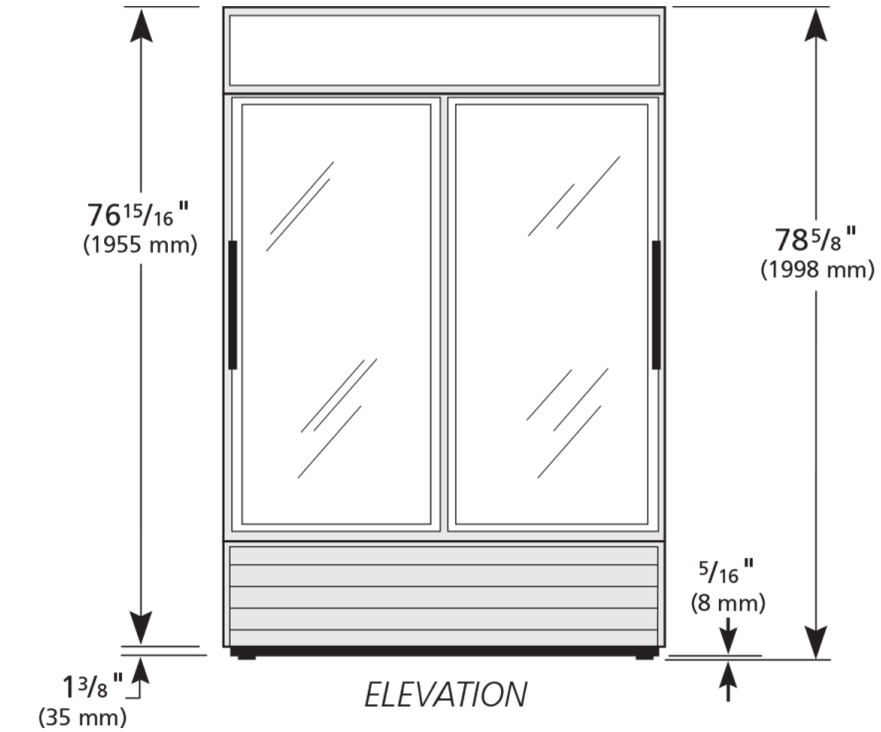

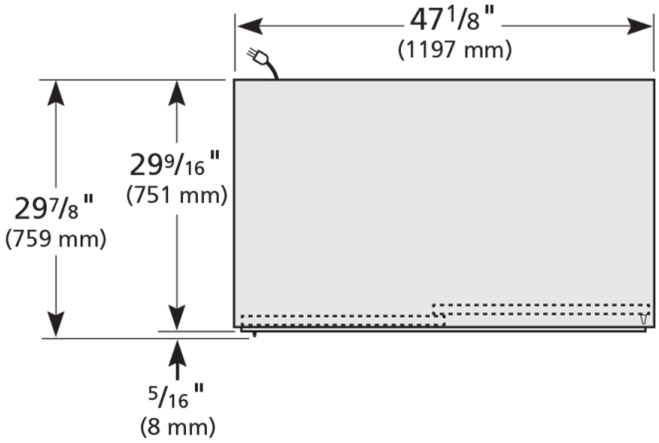

WARRANTY 5 YEARS PARTS, COMPRESSOR AND LABOUR

natural refrigerant.

Specifications subject to change without notice.
Chart dimensions rounded up to the next whole millimeter (inches rounded up to the 1/8")

UK & Ireland	0800 783 2049	TFIUK@truemfg.com
EMEA	+41 61 563 07 05	TrueCHCustomerService@truemfg.com
Australia	+61 2 9619 9999	TrueRefAus@truemfg.com

2024-03-21