Prep Tables

TFP-64-24M-D-2-HC

Prep Table, 24x 1/6 Top Pans, 2 Drawers + 1 Solid Swing Door

Dimensions	
External Width (mm)	1629
External Depth (mm)	801
External Height (mm)	1181
Exclusions	Depth does not include 51 mm for cutting board overhang. Height with lid closed.
Gross Volume (Litres)	623
Supplied Shelves	2
Shelf Size (L x D mm)	750 x 508
Internal Net Height (mm)	500
Top Pans Supplied (depth mm)	24x 1/6 GN (100)
Per Drawer Capacity (max depth mm)	1 x 2/1 GN (150)
Unpackaged Weight (kg)	241
Packaged Weight (kg)	252
Packaged Dimensions (W x D x H mm)	1723 x 864 x 1385
Cutting Board (L x D mm)	1629 x 204
Supplied with	Built-in recessed castors (19 mm clearance)

Build	
Door Description	1 Solid Swing Door
Number of Drawers	2
Drawers location	Left (standard) or Right (option)
Exterior Construction	Stainless steel front, top & hood, aluminium sides and rear
Interior Construction	Clear coated aluminium, stainless steel base
Air Intake Position	Front
Ventilation Position	Front
Clearance Required	Zero back and sides
Cord Length (Meters)	2.13
Standard w/ Locks	Not standard (SPEC3 option)

Technical	
Temperature Holding	0.5 : 5°C
Refrigerant	R290
Voltage / Frequency / Phase	220-240V/50Hz/1
Amps	1.9
Wattage	437
Defrost Type	Auto

CE UK CA WARRANTY 5 YEARS PARTS, COMPRESSOR AND LABOUR natural refrigerant.

Specifications subject to change without notice.
Chart dimensions rounded up to the next whole millimeter (inches rounded up to the 1/8")

UK & Ireland 0800 783 2049 TFIUK@truemfg.com
EMEA +41 61 563 07 05 TrueCHCustomerService@truemfg.com
Australia +61 2 9619 9999 TrueRefAus@truemfg.com

2024-03-21

Prep Tables

TFP-64-24M-D-2-HC

Prep Table, 24x 1/6 Top Pans, 2 Drawers + 1 Solid Swing Door

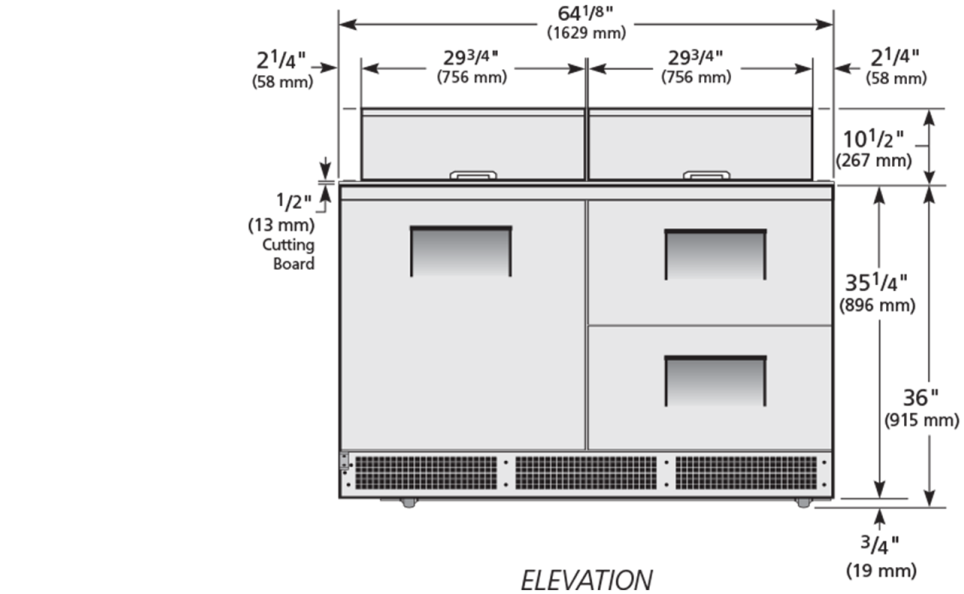

ELEVATION

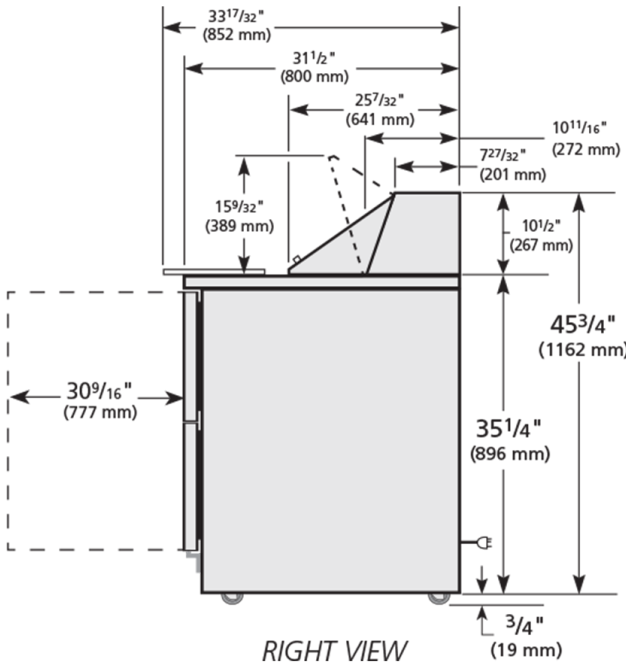

RIGHT VIEW

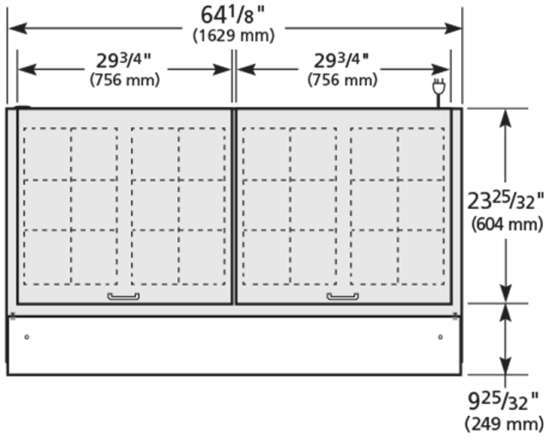

TOP VIEW WITH HOOD

WARRANTY 5 YEARS PARTS, COMPRESSOR AND LABOUR

natural refrigerant.

Specifications subject to change without notice.
Chart dimensions rounded up to the next whole millimeter (inches rounded up to the 1/8")

UK & Ireland	0800 783 2049	TFIUK@truemfg.com	
EMEA	+41 61 563 07 05	TrueCHCustomerService@truemfg.com	
Australia	+61 2 9619 9999	TrueRefAus@truemfg.com	

2024-03-21